GUTTER LT
BOX VERSION

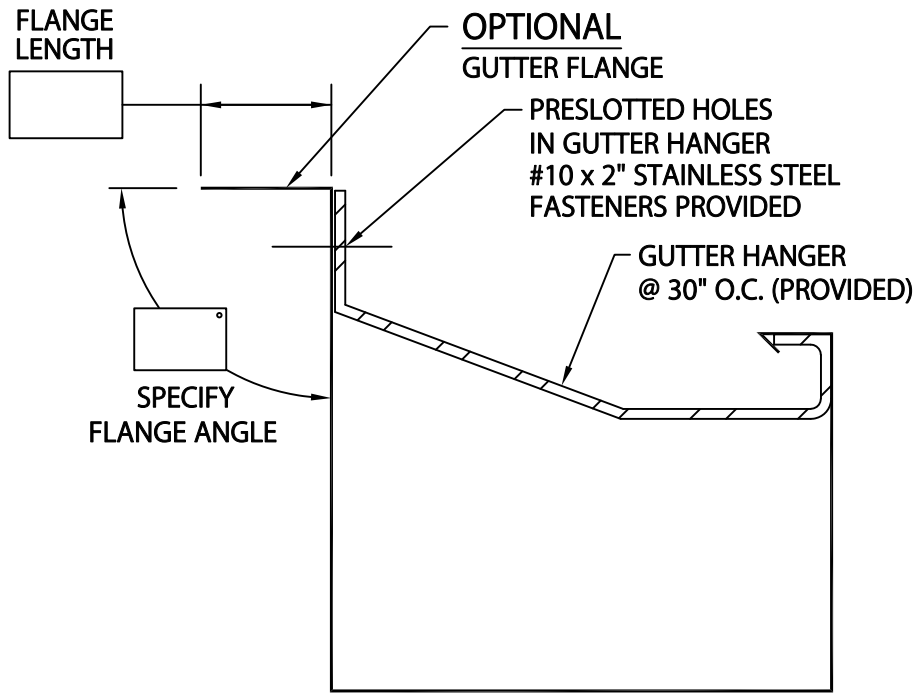

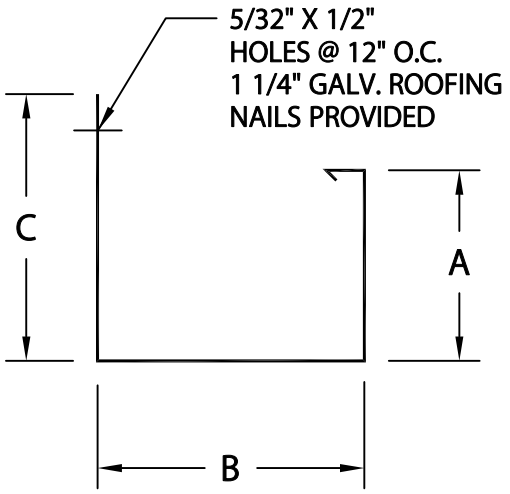

PRODUCT ID #	C	B	A	HANGER
☐ 7	7"	6"	6"	1 1/4" x .100" MILL
☐ 8	8"	7"	7"	2" X .100" MILL
☐ 9	9"	8"	8"	2" X .100" MILL

NOTES:

-- MAXIMUM DOWNSPOUT DIMENSION NOT TO EXCEED "B2" MINUS 9/16".

-- 2" LAP JOINTS PROVIDED.

Fabrication will proceed only after receipt of signed print approval.

Print Approval:

Architect and/or contractor shall verify all dimensions, sizes and quantities. All products to be installed in strict accordance with Petersen Aluminum's printed instructions.

Approved by: _____

Date: _____

MATERIAL:

___ 24 GA. GALVANIZED STEEL
___ .040" ALUMIINUM
___ .050" ALUMINUM
___ .063" ALUMINUM

QUANTITIES:

_____ LINEAL FEET 12'-0" LENGTHS
_____ OUTSIDE MITERS @ 90°
_____ INSIDE MITERS @ 90°
_____ ENDCAPS: RIGHT_____ LEFT_____

SPECIFY MITER TYPE:
☐ WELDED
☐ QUICKLOCK

PROJECT:

ARCHITECT:

ROOFING CONTRACTOR:

REPRESENTATIVE/DISTRIBUTOR:

DrexelMetals
Roofing Systems + Custom Fabrication
A CARLISLE COMPANY
1234 Gardiner Lane, Lousivlle, KY 40213
Phone: 888-321-9630
www.Drexelmetals.com

DATE: 09/18/25
DRN BY: JJC
CKD BY: MM

SHT.#___ OF ___
DWG# 41012-45611
A